BiAir®
Membrane air spring isolators

Low-frequency Bilz BiAir® membrane air spring with precise adjustable damping for effective vibration isolation of sensitive measurement and testing equipment, precision finishing machines, laser equipment and optical and electronic instruments as well as vehicle, engine and gearbox test beds, etc.

BiAir® MEMBRANE AIR SPRING ISOLATOR WITH ADJUSTABLE DAMPING

The BiAir® membrane air spring isolator is made of machined or cast aluminium. The air space is enclosed by thin-walled flexible and pressure-resistant rolling membrane. A piston sits on top of the membrane and is pressed into the air space.

This design allows a highly-effective isolation against vibration. In order to simultaneously achieve a high degree of damping, the air space within the isolator is divided into two chambers connected with an air tube (load/damping volume). An adjustable throttle valve is used to set the flow cross section to the desired damping effect from the outside. The friction in the air flow generated by the throttle valve can create a damping effect of up to 15 %.

Damage to the rolling membrane due to overpressure is virtually eliminated through the use of additional safety valves or a mechan-ical piston stroke limit.

- Highly effective vibration isolation of
  - sensitive measurement and testing equipment,
  - precise finishing machines,
  - laser equipment as well as optical and electronic instruments.
- Vibration isolated mountings of vehicles, engines and gearbox test stands.
- Foundation isolation

Advantages compared to conventional steel springs

The use of Bilz BiAir® air spring isolators with active level control constantly maintains the correct level of machines or foundations. The level control and adjustment is completely automatic!

The pressure in the air springs is appropriately adjusted by inflating or deflating in response to load changes. This keeps the isolating effect constant in every case.

Unlike steel springs air springs do not transmit structure-borne sound.

With/without isolation

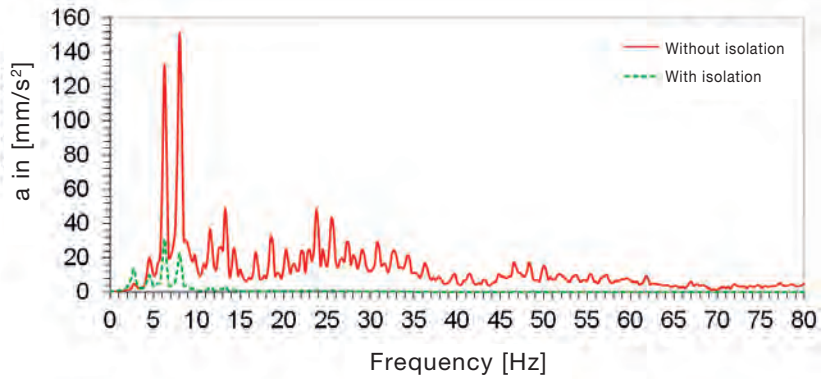

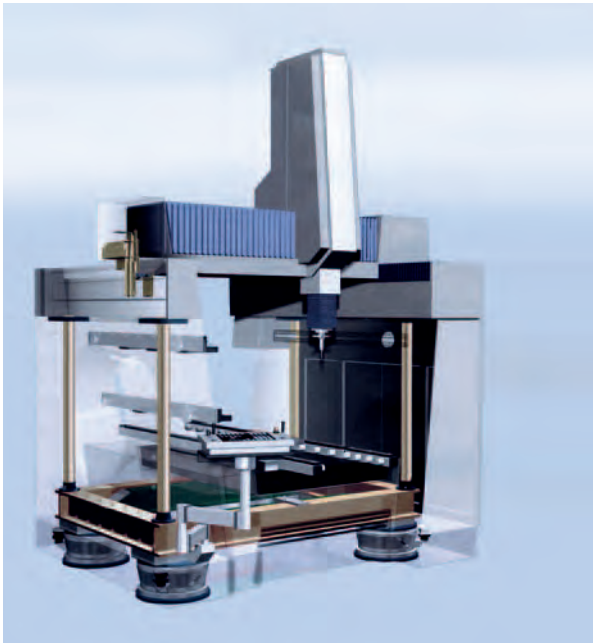

Note:

- BiAir® membrane air springs are available in the following materials depending on size
  - BiAir®-ED: Cast aluminium, powder coated RAL similar to 7037 dusty grey
  - BiAir®-ED-AL: Aluminium (naturally anodized)
- BiAir are available with a nose for mounting valves (MPN) or position sensors with the tubing connection on the left (NL) or on the right (NR).

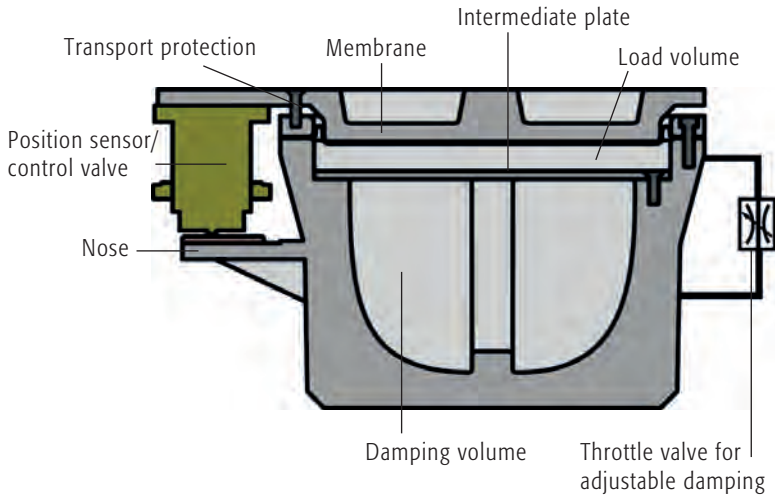

TYPE SERIES BiAir®-ED-AL IN ANODISED ALUMINIUM

Natural frequency vertical approximately 2.5 Hz, horizontal approximately 2.8 Hz.

	Aluminium BiAir®-ED-AL			A	B	C	Working height H	+/- travel	max. load N** at an air pressure of	
Type	No Nose	NR	NL	mm	mm	mm	mm		4 bar	6 bar
0.125*	50-0002	-	-	75	-	74	77	+/-2.0	390	580
0.15*	50-0005	-	-	75	-	74	77	+/-2.0	670	1,000
0.25*	50-0129	50-0135	50-0136	120	182	110	87	+/-2.5	1,130	1,700
0.5	50-0130	50-0137	50-0138	130	198	129	100	+/-2.5	2,670	4,000
1	50-0131	50-0139	50-0140	200	275	200	100	+/-2.5	6,330	9,500
1.5	50-0146	50-0147	50-0148	230	305	230	100	+/-3.5	10,170	15,260
2	50-0133	50-0141	50-0144	260	350	260	100	+/-2.5	14,200	21,300
2.5	50-0134	50-0142	50-0143	300	390	300	100	+/-3.0	19,670	29,500

* Natural frequency vertical approximately 3.0 Hz, horizontal approximately 3.5 Hz
** When selecting the size of air spring please select an air pressure of 4 bar.

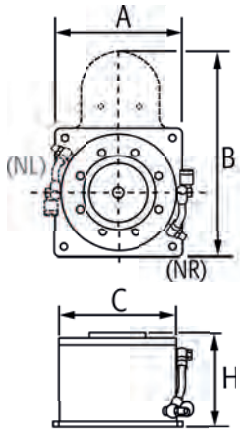

TYPE SERIES BiAir®-ED/-HE/-HE-MAX IN CAST ALUMINIUM

Natural frequencies vertical	**BiAir®-ED**	**approx. 2.5 Hz**	**Natural frequencies horizontal**	**BiAir®-ED**	**approx. 2.8 Hz**
	BiAir®-ED-HE	**approx. 1.7 Hz**		**BiAir®-ED-HE**	**approx. 2.8 Hz**
	BiAir®-ED-HE-MAX	**approx. 1.2 Hz**		**BiAir®-ED-HE-MAX**	**approx. 2.8 Hz**

	Item no.			ØA	B	ØC	Working height H in mm			+/- travel	max. load N** at an air pressure of	
Type	BiAir®-ED	BiAir®-ED/HE	BiAir®-ED/ HE-MAX	mm	mm	mm	BiAir®-ED	ED/HE	ED/ HE-MAX	mm	4 bar	6 bar
0.5	50-0012	50-0145	-	120	216	129	157	307	-	+/- 2.5	2,670	4,000
1	50-0026	50-0027	50-0035	172*	288	200	157	307	509	+/- 2.5	6,330	9,500
1.5	50-0020	50-0021	50-0025	212*	305	230	157	307	509	+/- 3.5	10,170	15,260
2	50-0045	50-0046	50-0054	226*	335	260	157	307	509	+/- 2.5	14,200	21,300
2.5	50-0036	50-0037	50-0044	271*	378	300	157	307	509	+/- 3.0	19,670	29,500
3	50-0055	50-0056	50-0062	348*	467	382	157	307	509	+/- 2.5	34,130	51,200
4	50-0064	50-0065	50-0066	490	605	530	157	307	509	+/- 2.75	65,730	98,600
5	50-0072	-	50-0073	747	875	798	157	-	509	+/- 3.5	155,730	233,600

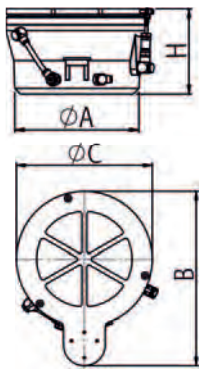

* For the sizes 1 to 3 of series ED/HE-MAX the ØA is the same as ØC (piston diameter)
** When selecting the size of air spring please select an air pressure of 4 bar.

Note

- The maximum movement in the horizontal plane is between approximately 1 to 2 mm depending on the size of the air spring.
- In addition to the standard solutions listed here we also offer numerous air springs with a larger stroke and lower natural frequency.
- Powder coated air springs are also available in other RAL colors on request.
- Allowable temperature range: -20 °C to +80 °C (-5 °F to +175 °F)
- If you have any questions please contact us, we would be happy to advise you.

We reserve the right to make changes without prior notice.

MPN
Mechanical pneumatic level control for Bilz air springs

Bilz mechanical pneumatic level control for air spring systems
with FAEBI® and FAEBI®-HD rubber or BiAir® membrane air springs.
Powerful vibration isolation with maximum level control.

Mechanical pneumatic level control **MPN**

Bilz level control systems are significant components in the optimum function of vibration isolation using FAEBI® and FAEBI®-HD rubber or BiAir® membrane air springs. They reliably prevent any unwanted deflections of the isolators or an out-of-level condition of the machine that can be caused by load changes on an air spring mounted machine or system. Rapidly adding or venting air enables the air pressure within the air spring to be matched to the respective load, automatically controlling the height of the individual air springs. This enables the highest degree of stability and effective isolation even with changes in the center of gravity.

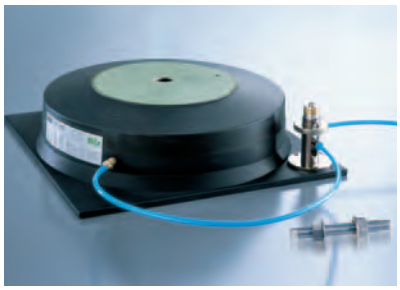

Fig. 1

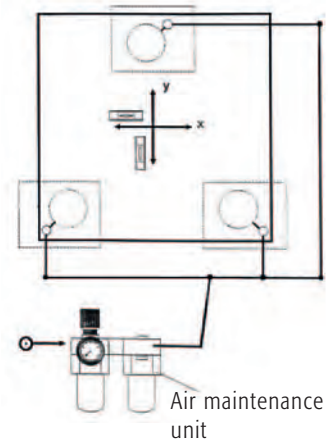

Valve functions

The level is continuously monitored by the plunger.
The position of the plunger is directly applied to the slide valve and the air spring is either pressurized or vented. The target level is adjusted by turning the knurled adjustment ring. The height and level of the machine is adjusted using three valves.

Design

At least three air springs are controlled (Fig. 1). If more isolators are required due to reasons of design or load, the system must still be set up in three controlled groups, as otherwise the system is statically indeterminate. This is achieved by using multiple isolators in parallel as a group (Fig.2).
An additional air maintenance unit is installed upstream of the control valves to prepare the compressed air.
See also Page 52.

Fig. 2

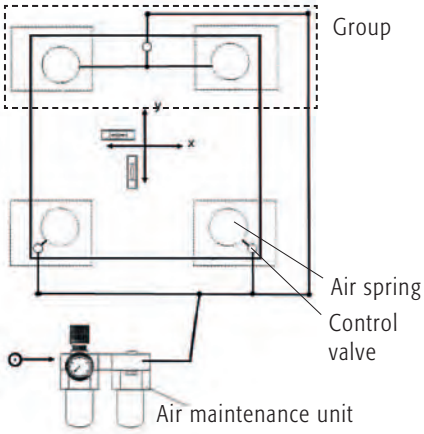

MPN-LCV

Item no. 61-0012

Very robust, zinc plated proportional valve. Repeatable accuracy of ± 1/10 mm (±0.004"). **Suitable for Bilz FAEBI®, FAEBI®-HD and BiAir® air spring isolators.**

Available in the following versions:
- MPN-LCV: Item no. 61-0012
  Standard version of the LCV with hard metal discs
- MPN-LCV-KURZ-Pad-A: Item no. 61-0054
  Shortened version of the LCV with plunger isolation pad

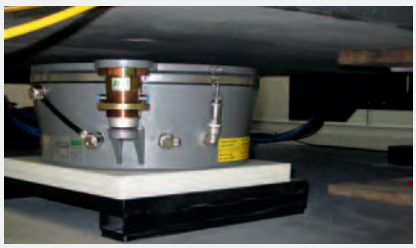

MPN-PVM

Item no. 61-0010

High-precision chromate plated proportional valve.
Repeatable accuracy of ± 1/100 mm (±0.0004"). **Suitable for Bilz BiAir® air spring isolators.**

Available in the following versions:
- MPN-PVM: Item no. 61-0010
  Standard version of the PVM with hard metal discs
- MPN-PVM-KURZ-Pad-A: Item no. 61-0058
  Shortened version of the PVM with plunger isolation pad

Note

- Supplied as a complete set which includes the 3 control valves and all necessary tubing and fittings.
  All components are also individually available as spare parts.
- In addition to the standard solutions listed here we also supply special versions with regard to material, flow, accuracy and restoring force.
- On the LCV model the air flow can be reduced using the throttle valve should the control system tend to overshoot.
  The PVM model can also be fitted with a throttle valve as an option.
- If you have any questions please contact us, we would be happy to advise you.

PLUNGER ISOLATION PAD

To reduce the vibrations and disturbances transmitted through the valve plunger we offer a specially matched plunger isolation pad.

The plunger isolation pad is an additional isolation disc that is inserted between the valve plunger and the machine that reduces disturbances that would otherwise be transmitted through the valve plunger. This facilitates improved isolation of sensitive machinery, particularly where the load is low.

The plunger isolation is normally ordered with the appropriate level control, see p. 51. The additional installation height must be taken into account. Shortened valves must be used when using with the BiAir® membrane air spring.

Item no. for individual ordering: 61-0026

FINGER PINCH PROTECTION

With the finger pinch protection installed, the risk of pinching a finger in the area of the valve or plunger will be reduced.

The finger pinch protection can be placed on the hard metal disc and can therefore be retrofitted to existing systems. For maintenance purposes, the finger pinch protection can be removed without damage for maintenance work.

The finger pinch protection is compatible with both the PVM and with LCV valves, and the electronic systems AIS ™ and EPPC™.

Item no. for individual ordering: 50-0092

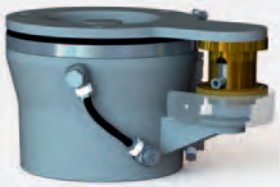

Air maintenance units with pressure regulators

The air maintenance units are used to set the optimum system pressure and prepare the compressed air for the air spring system. The integrated compressed air preparation system traps incidental condensate and cleans the compressed air of particles such as rust and dust.

WFD-M: Item no. 61-0045
Version with filter, matched for use with MPN-LCV

WFD-M-PVM: Item no. 61-0048
Version with fine filter, matched for use with MPN-PVM

WFD-M-PVM-ÖL-FILTER: Item no. 61-0049
Version with ultra fine filter, matched for use with MPN-PVM with contaminated/oily air*

WFD-M

WFD-M-PVM

WFD-M-PVM-ÖL-FILTER

* Must be checked against the air class.

Note

- For the operation of the pneumatic air springs, a compressed air quality in accordance with ISO 8573-1:2010 must be given:
  In combination with MPN-PVM: Air class 2.4.2;
  below 15 °C (60 °F): Air class 2.3.3
  In combination with MPN-LCV: Air class 3.4.3
- If you have any questions please contact us, we would be happy to advise you.